DocuSign Envelope ID: C93EE923-AD17-49E7-ADA1-9D66E247647C

8/17/99

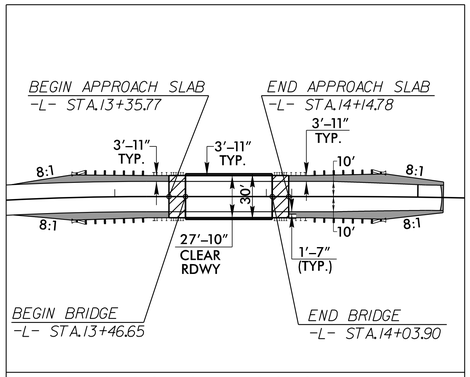

SKETCH SHOWING DIMENSION OF PAVEMENT AND SHOULDERS IN RELATION TO PROPOSED BRIDGE WIDTH

PAVED SHOULDER

CURVE DATA (-L-)

PI Sta 12+43.62
△ = 4° 52' 07.2" (RT)
D = 3° 08' 22.2"
L = 155.08'
T = 77.59'
R = 1,825.00'
e = 3.0%
Ro = 57'
Ds = 45 MPH*

CURVE DATA (-L-)

PI Sta 15+20.16
△ = 2° 03' 40.5" (RT)
D = 1° 21' 32.4"
L = 151.67'
T = 75.85'
R = 4,216.00'
e = RC
Ro = 38'
Ds = 45 MPH*

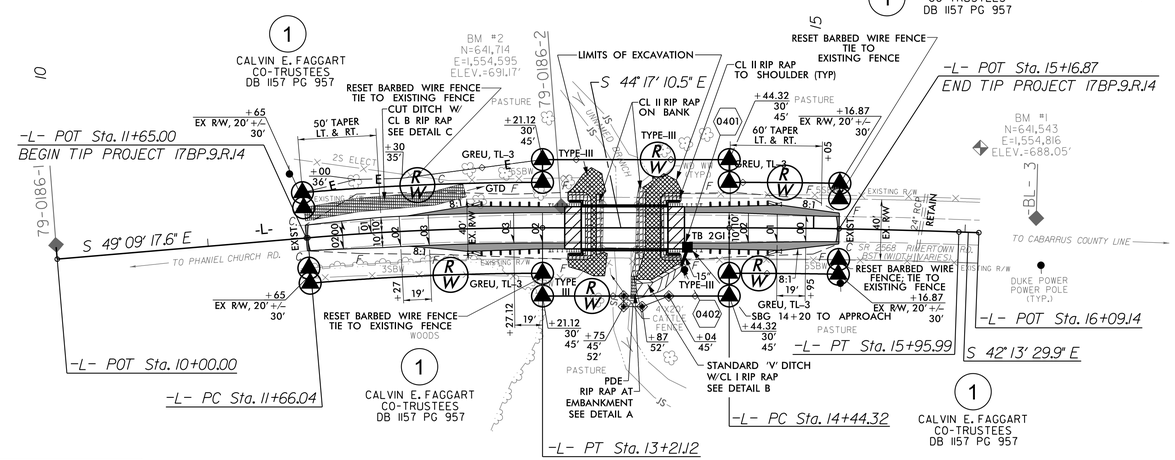

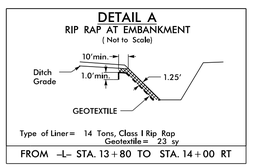

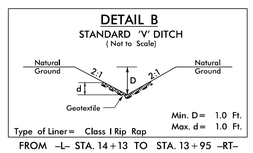

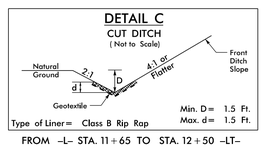

* MEETS SUB REGIONAL TIER GUIDELINES

PROJECT REFERENCE NO.	SHEET NO.
17BP.9.R.14	4
R/W SHEET NO.	

ROADWAY DESIGN ENGINEER: NORTH CAROLINA PROFESSIONAL SEAL 33290 7/17/2017 ENGINEER ROMAN A. THIGPEN

HYDRAULICS ENGINEER: NORTH CAROLINA PROFESSIONAL SEAL 032312 7/17/2017 ENGINEER CHARLES W. HEARNES

DOCUMENT NOT CONSIDERED FINAL UNLESS ALL SIGNATURES COMPLETED

PLANS PREPARED BY:

WSP USA
434 FAYETTEVILLE STREET
SUITE 1500
RALEIGH, NC 27601
TEL: 1.919.836.4040
FAX: 1.919.836.4099
LICENSE NO. F-0165

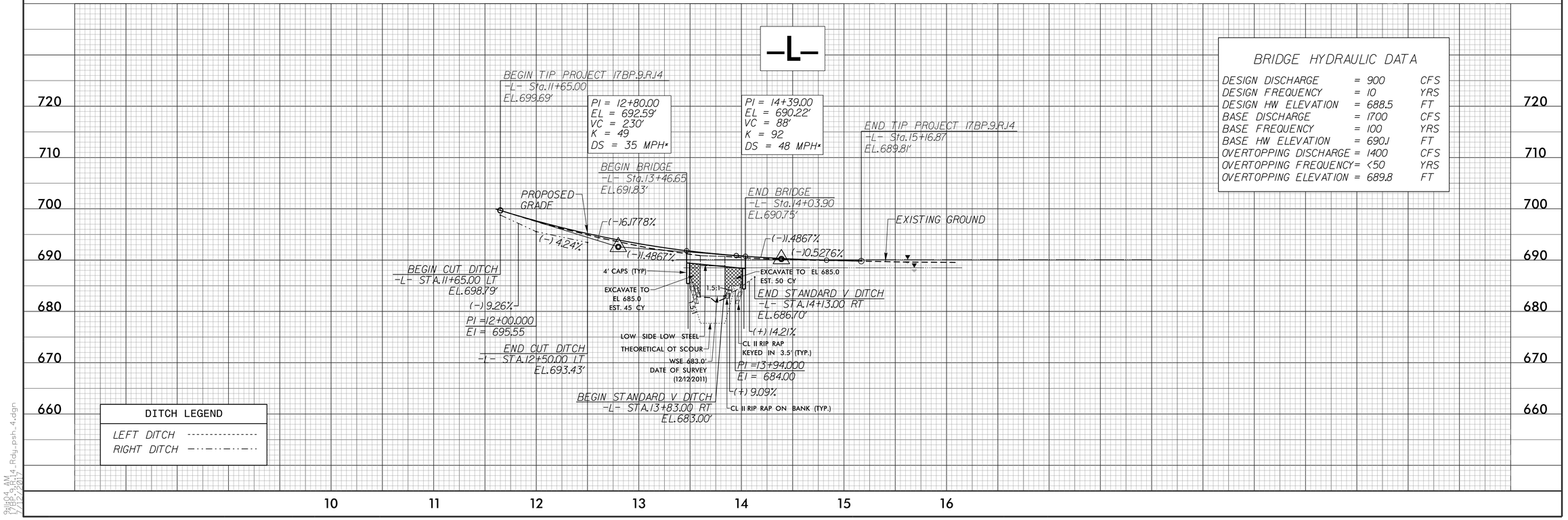

DITCH LEGEND

LEFT DITCH
RIGHT DITCH

BRIDGE HYDRAULIC DATA

DESIGN DISCHARGE	= 900	CFS
DESIGN FREQUENCY	= 10	YRS
DESIGN HW ELEVATION	= 688.5	FT
BASE DISCHARGE	= 1700	CFS
BASE FREQUENCY	= 100	YRS
BASE HW ELEVATION	= 690.1	FT
OVERTOPPING DISCHARGE	= 1400	CFS
OVERTOPPING FREQUENCY	= <50	YRS
OVERTOPPING ELEVATION	= 689.8	FT

9:11:04 AM
17BP.9.R.14_Rdy_psh_4.dgn
7/12/2017