DocuSign Envelope ID: C93EE923-AD17-49E7-ADA1-9D66E247647C

09/08/99

PROJECT: 17BP.9.R.14

CONTRACT: DI00170

See Sheet 1-A For Index of Sheets
See Sheet 1-B For Symbology Sheet

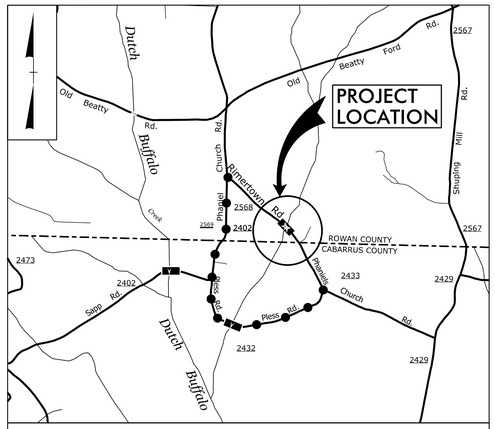

VICINITY MAP

DETOUR ROUTE

STATE OF NORTH CAROLINA
DIVISION OF HIGHWAYS

ROWAN COUNTY

STATE	STATE PROJECT REFERENCE NO.	SHEET NO.	TOTAL SHEETS
N.C.	17BP.9.R.14	1	

STATE PROJ. NO.	F. A. PROJ. NO.	DESCRIPTION
17BP.9.R.14	N/A	PE
17BP.9.R.14	N/A	R/W & UTIL.
17BP.9.R.14	N/A	CONSTR.

LOCATION: REPLACE EXISTING BRIDGE No. 186 ON SR 2568 (RIMERTOWN RD)

TYPE OF WORK: GRADING, DRAINAGE, PAVING AND STRUCTURE

NAD 83/ NSRS 2007

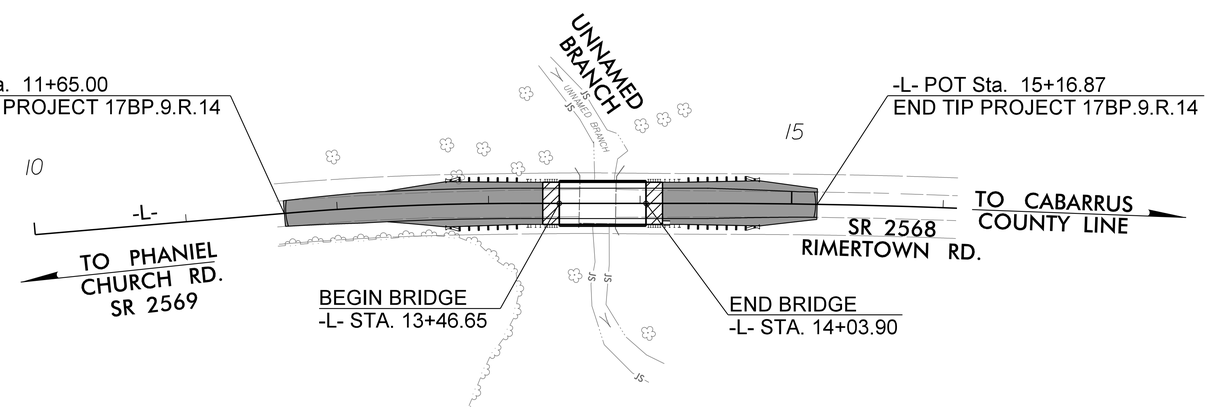

NOTE:
1. THERE IS NO CONTROL OF ACCESS ON THIS PROJECT.

DOCUMENT NOT CONSIDERED FINAL UNLESS ALL SIGNATURES COMPLETED

GRAPHIC SCALES

50 25 0 50 100
PLANS

50 25 0 50 100
PROFILE (HORIZONTAL)

10 5 0 10 20
PROFILE (VERTICAL)

DESIGN DATA

ADT 2008 = 460 VPD
V = 55 MPH*

* SUB REGIONAL TIER GUIDELINES

STATUTORY SPEED LIMIT 55 MPH

PROJECT LENGTH

LENGTH ROADWAY PROJECT 17BP.9.R.14	=	0.057 MI
LENGTH STRUCTURE PROJECT 17BP.9.R.14	=	0.010 MI
TOTAL LENGTH PROJECT 17BP.9.R.14	=	0.067 MI

Prepared In the Office of
WSP USA
434 FAYETTEVILLE STREET
SUITE 1500
RALEIGH, NC 27601
TEL: 1.919.836.4040
FAX: 1.919.836.4099
LICENSE NO. F-0165

FOR THE NORTH CAROLINA DEPARTMENT OF TRANSPORTATION

2012 STANDARD SPECIFICATIONS

RIGHT OF WAY DATE:
JUNE 1, 2017

LETTING DATE:
AUG. 23, 2017

RONYELL THIGPEN, PE
PROJECT ENGINEER

ERIC MISAK
PROJECT DESIGN ENGINEER

NCDOT CONTACT: MATTHEW JONES, PE
DIVISION 9 BRIDGE PROGRAM MANAGER

HYDRAULICS ENGINEER

NORTH CAROLINA PROFESSIONAL SEAL 032312 ENGINEER CHARLES W HEAFNER
7/31/2017

DocuSigned by: Charles Heafner
F9F164862DF9476...
P.E.
SIGNATURE:

ROADWAY DESIGN ENGINEER

NORTH CAROLINA PROFESSIONAL SEAL 33290 ENGINEER RONYELL A. THIGPEN
7/27/2017

DocuSigned by: Ronyell Thigpen
57051A863B324EF...
P.E.
SIGNATURE:

STATE OF NORTH CAROLINA DEPARTMENT OF TRANSPORTATION

9:26:09 AM
17BP.9.R.14_Rdy_tsh.dgn
7/13/2017