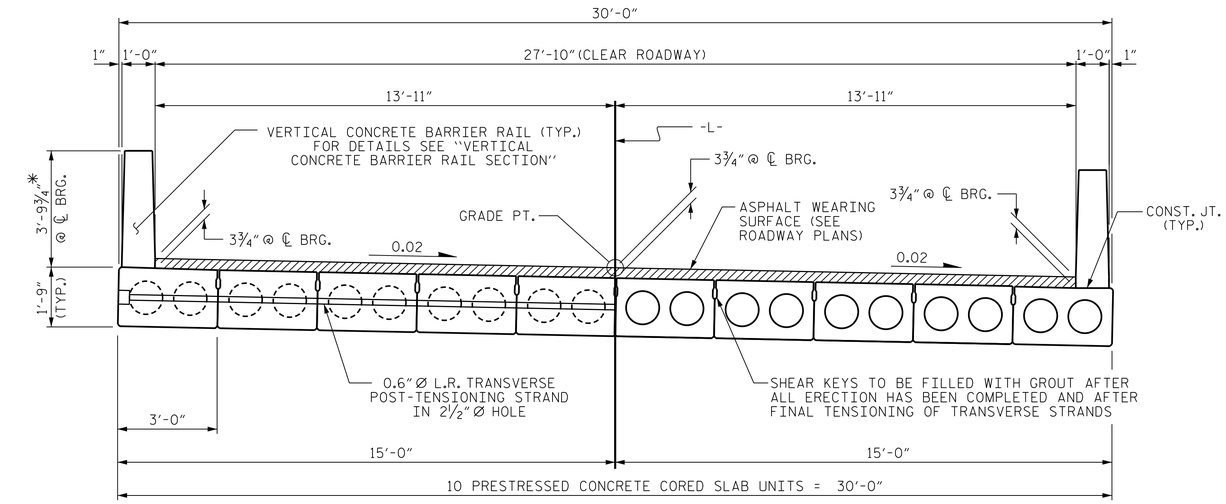

HALF SECTION
AT INTERMEDIATE DIAPHRAGMS

HALF SECTION
THROUGH VOIDS

TYPICAL SECTION

* - THE MAXIMUM BARRIER RAIL HEIGHT AND ASPHALT THICKNESS IS SHOWN. THE HEIGHT OF THE BARRIER RAIL AND ASPHALT THICKNESS VARIES WHILE THE TOP OF THE BARRIER RAIL FOLLOWS THE PROFILE OF THE GUTTERLINE. FOR RAIL HEIGHT DETAILS AND ASPHALT THICKNESS SEE THE "VERTICAL CONCRETE BARRIER RAIL SECTION" DETAIL.

FIXED END

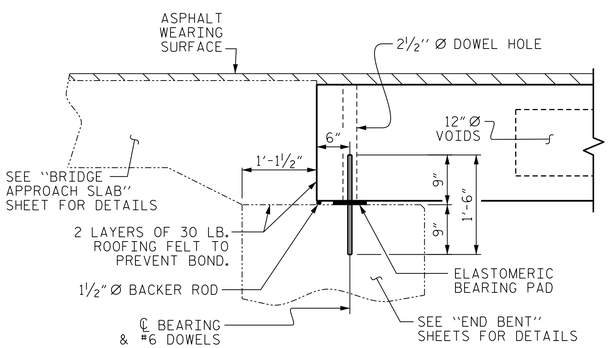

SECTION AT END BENT

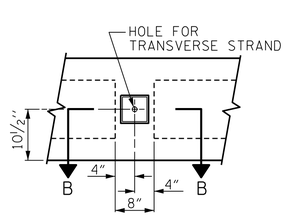

ELEVATION VIEW

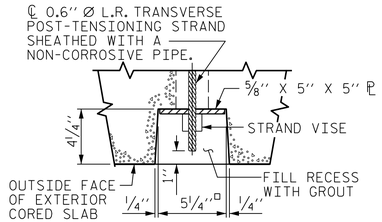

SECTION B-B

GROUTED RECESS AT END OF POST-TENSIONED STRAND OF CORED SLABS

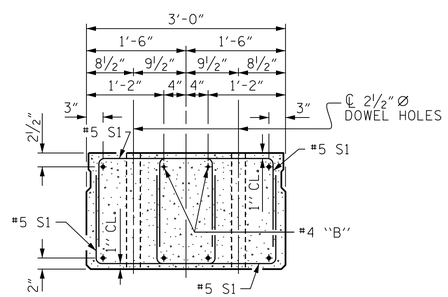

END ELEVATION

SHOWING PLACEMENT OF DOUBLE STIRRUPS AND LOCATION OF DOWEL HOLES. (STRAND LAYOUT NOT SHOWN.) INTERIOR SLAB UNIT SHOWN-EXTERIOR SLAB UNIT SIMILAR EXCEPT SHEAR KEY LOCATION.

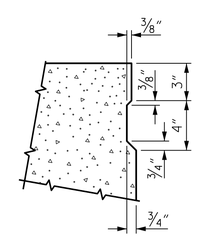

SHEAR KEY DETAIL

NOTE: OMIT SHEAR KEY ON OUTSIDE FACE OF EXTERIOR CORED SLABS.

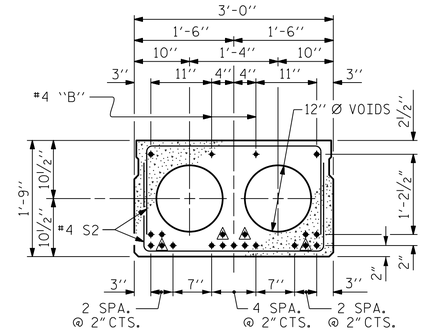

INTERIOR SLAB SECTION (55' UNIT)

(19 STRANDS REQUIRED)

0.6" Ø LOW RELAXATION STRAND LAYOUT

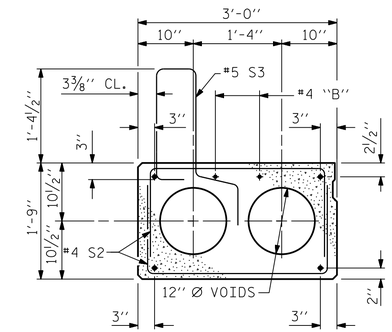

EXT. SLAB SECTION

(FOR PRESTRESSED STRAND LAYOUT, SEE INTERIOR SLAB SECTION.)

BOND SHALL BE BROKEN ON THESE STRANDS FOR A DISTANCE OF 6'-0" FROM END OF CORED SLAB UNIT. SEE STANDARD SPECIFICATIONS, ARTICLE 1078-7.

DEBONDING LEGEND

PERMITTED THREADED INSERT CAST IN OUTSIDE FACE OF EXTERIOR UNIT AND RECESSED ⅜". SIZE TO BE DETERMINED BY CONTRACTOR.

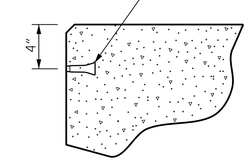

THREADED INSERT DETAIL

PROJECT NO. 17BP.9.R.14
ROWAN COUNTY
STATION: 13+75.00 -L-

SHEET 1 OF 3

STATE OF NORTH CAROLINA
DEPARTMENT OF TRANSPORTATION
RALEIGH

STANDARD
3'-0" X 1'-9"
PRESTRESSED CONCRETE
CORED SLAB UNIT
90° SKEW

WSP USA Inc.
1001 MOREHEAD SQUARE DRIVE
SUITE 610
CHARLOTTE, NC 28203
TEL: 1.704.342.5401
WSP.COM
LICENSE NO. F-0165

NORTH CAROLINA PROFESSIONAL SEAL 031988 ENGINEER JACOB P. SHERMAN
DocuSigned by: Jacob P. Sherman
AE8326DDCE18488...
7/17/17

DOCUMENT NOT CONSIDERED FINAL UNLESS ALL SIGNATURES COMPLETED

REVISIONS								SHEET NO.
NO.	BY:	DATE:	NO.	BY:	DATE:			S-4
1			3					TOTAL SHEETS
2			4					13

ASSEMBLED BY: M. HOBBS	DATE : MAR 2017	DRAWN BY : DGE 5/09	REV. 8/14 MAA/TMG
CHECKED BY: J. SMITH	DATE : APR 2017	CHECKED BY : BCH 6/09	
DESIGN ENGINEER OF RECORD: J. SHERMAN	DATE : JUL 2017		

7/17/2017
J:\173561 - 2012 NCDOT Division On-Call\173561E Group 5 Bridges\17BP.9.R.14 Rimertown Road\Structures\02-Drawings\400_007_17BP.9.R.14_SMU_CS01.dgn

STD. NO. 21" PCS2_30_90S