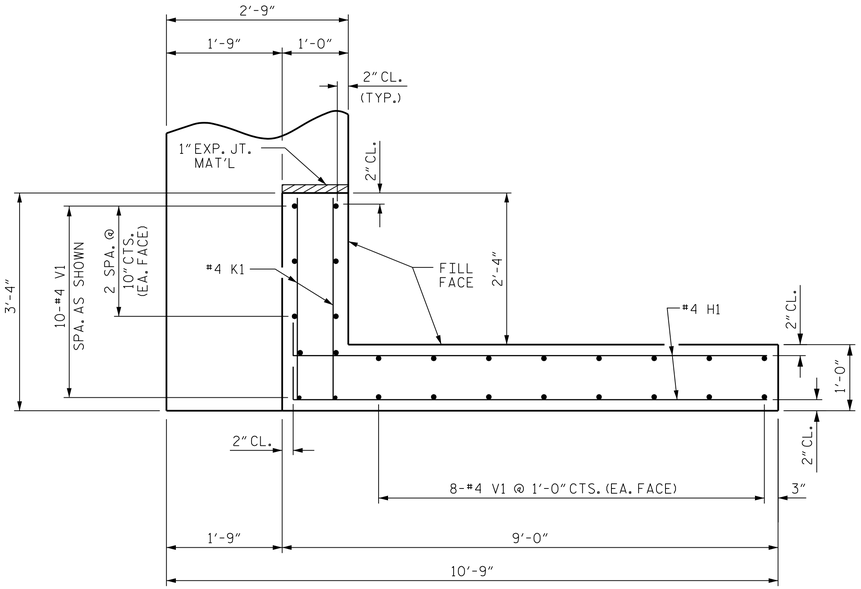

PLAN OF WING (W1)

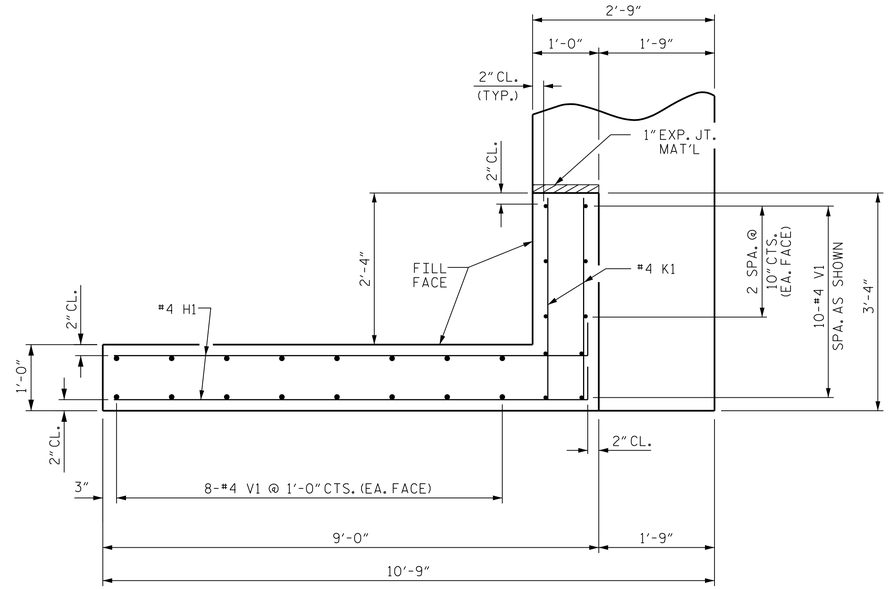

PLAN OF WING (W2)

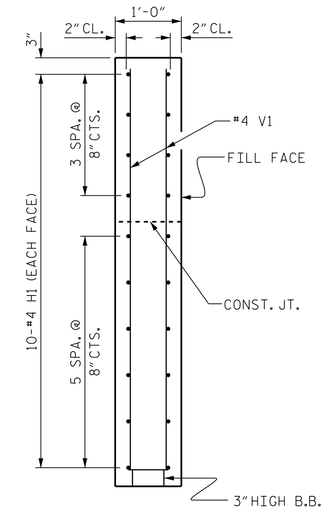

SECTION X-X

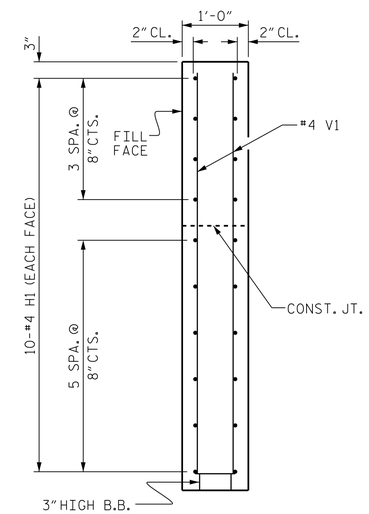

SECTION Y-Y

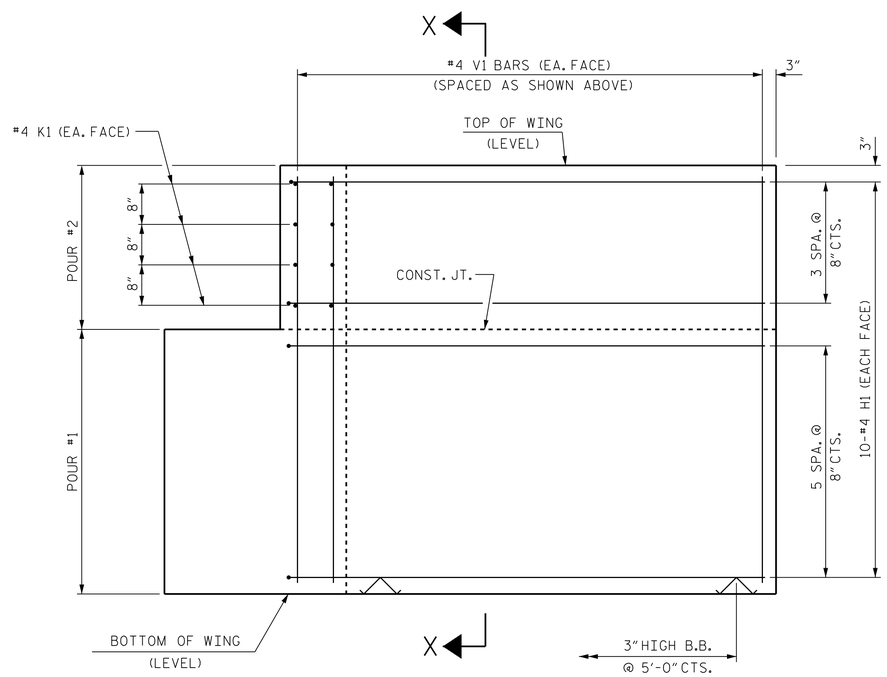

ELEVATION OF WING (W1)

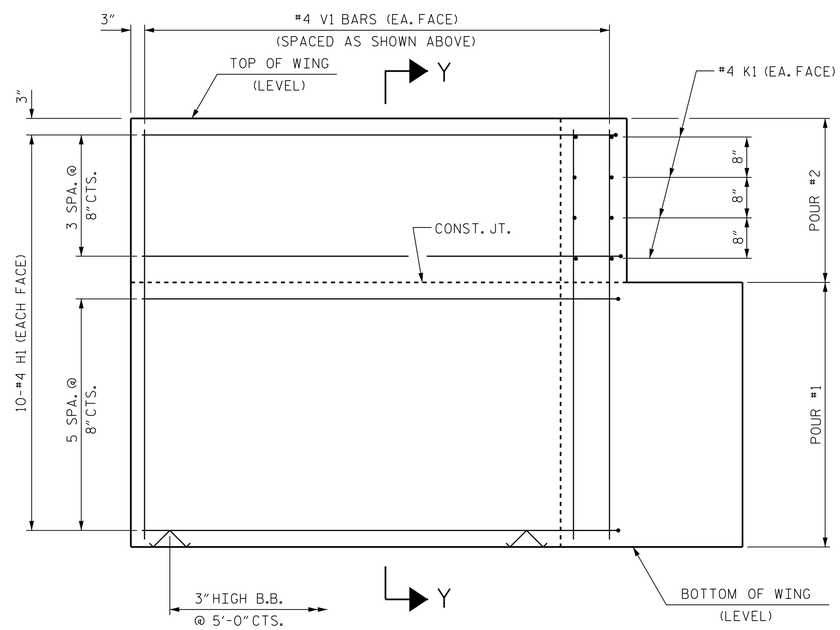

ELEVATION OF WING (W2)

WING DETAILS

PROJECT NO. 17BP.9.R.14

ROWAN COUNTY

STATION: 13+75.00 -L-

SHEET 3 OF 4

STATE OF NORTH CAROLINA
DEPARTMENT OF TRANSPORTATION
RALEIGH

SUBSTRUCTURE

END BENT
WING DETAILS

WSP USA Inc.
1001 MOREHEAD SQUARE DRIVE
SUITE 610
CHARLOTTE, NC 28203
TEL: 1.704.342.5401

WSP.COM

LICENSE NO. F-0165

NORTH CAROLINA PROFESSIONAL SEAL 031988 ENGINEER JACOB P. SHERMAN

DocuSigned by: 7/17/17
Jacob P. Sherman
AE8326DDCE18488...

DOCUMENT NOT CONSIDERED FINAL UNLESS ALL SIGNATURES COMPLETED

REVISIONS								SHEET NO.
NO.	BY:	DATE:	NO.	BY:	DATE:			S-10
1			3					TOTAL SHEETS
2			4					13

ASSEMBLED BY: M. HOBBS	DATE : MAR 2017	DRAWN BY : WJH 12/11	REV. 4/15 MAA/TMG
CHECKED BY: J. SMITH	DATE : APR 2017	CHECKED BY : AAC 12/11	
DESIGN ENGINEER OF RECORD: J. SHERMAN	DATE : JUL 2017		

7/17/2017
J:\173561 - 2012 NCDOT Division On-Call\173561E Group 5 Bridges\17BP.9.R.14 Rimertown Road\Structures\02-Drawings\400.019.17BP.9.R.14.SMU_EB03.dgn

STD. NO. EB_30_90S4