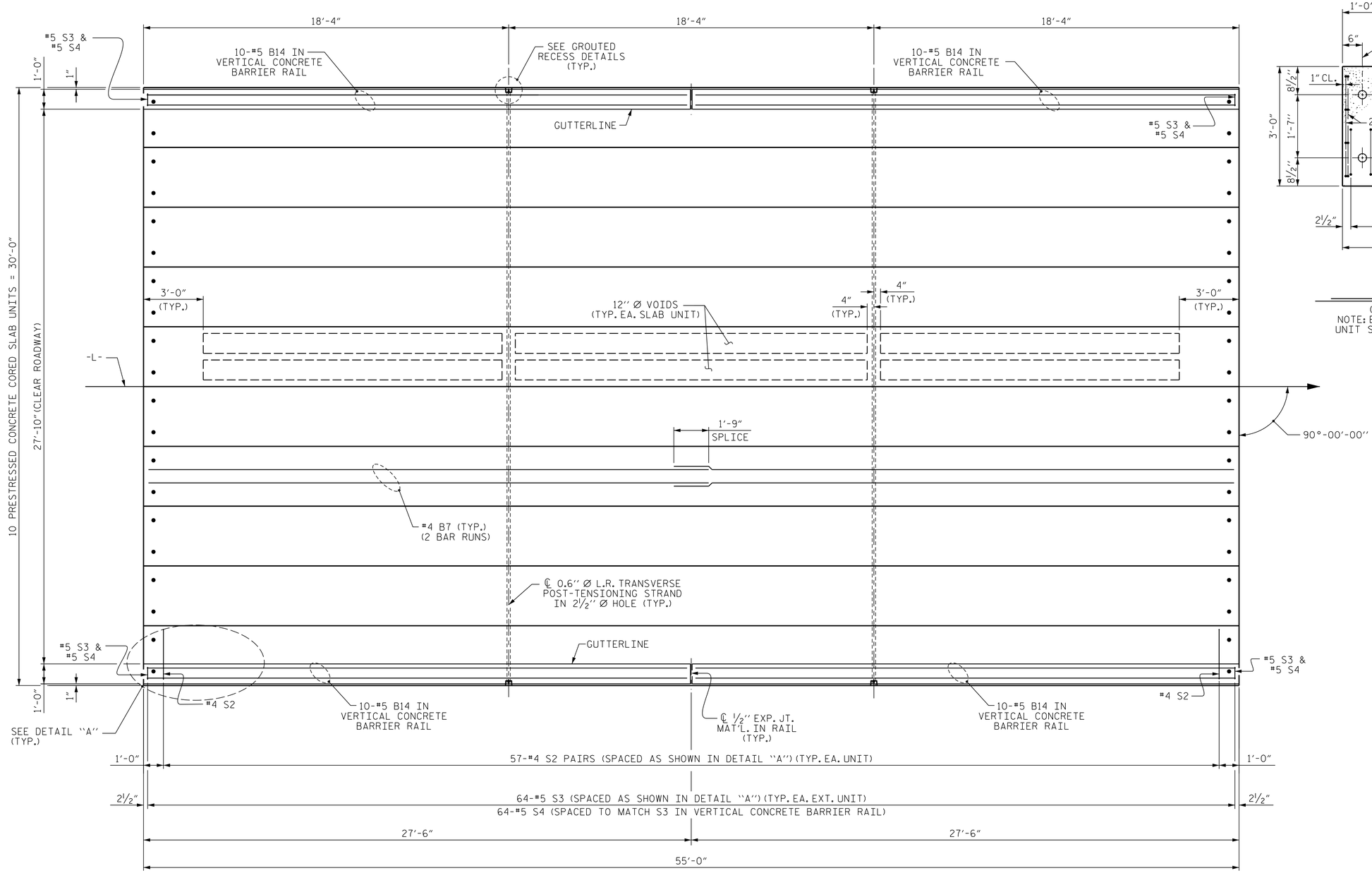

PLAN OF UNIT

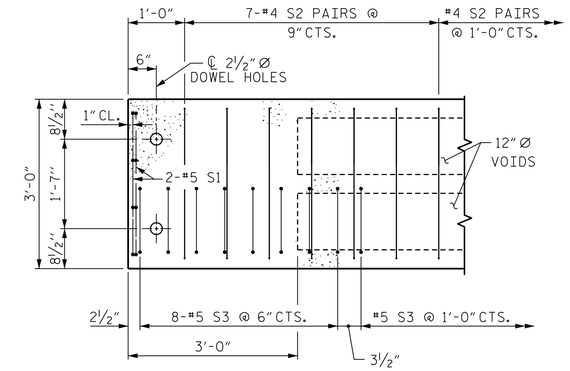

DETAIL "A"

(TYPICAL EACH END OF UNIT)
NOTE: EXTERIOR UNIT SHOWN - INTERIOR UNIT SIMILAR EXCEPT OMIT #5 S3 BARS.

PROJECT NO. 17BP.9.R.14

ROWAN COUNTY

STATION: 13+75.00 -L-

SHEET 2 OF 3

STATE OF NORTH CAROLINA
DEPARTMENT OF TRANSPORTATION
RALEIGH

STANDARD

PLAN OF 55' UNIT
27'-10" CLEAR ROADWAY
90° SKEW

WSP USA Inc.
1001 MOREHEAD SQUARE DRIVE
SUITE 610
CHARLOTTE, NC 28203
TEL: 1.704.342.5401
WSP.COM
LICENSE NO. F-0165

NORTH CAROLINA PROFESSIONAL SEAL 031988 ENGINEER JACOB P. SHERMAN

DocuSigned by: Jacob P. Sherman
AE8326DDCE18488...
7/17/17

DOCUMENT NOT CONSIDERED FINAL UNLESS ALL SIGNATURES COMPLETED

REVISIONS						SHEET NO.
NO.	BY:	DATE:	NO.	BY:	DATE:	S-5
1			3			TOTAL SHEETS
2			4			13

ASSEMBLED BY: M. HOBBS	DATE : MAR 2017	DRAWN BY : DGE 3/09	REV. 12/5/11 MAA/AAC
CHECKED BY: J. SMITH	DATE : APR 2017	CHECKED BY : BCH 3/09	REV. 8/14 MAA/TMG
DESIGN ENGINEER OF RECORD: J. SHERMAN	DATE : JUL 2017		

STD. NO. 21" PCS_30_90S_55L

7/17/2017
J:\173561 - 2012 NCDOT Division On-Call\173561E Group 5 Bridges\17BP.9.R.14 Rimertown Road\Structures\02-Drawings\400_009_17BP.9.R.14_SMU_CS02.dgn