DocuSign Envelope ID: C93EE923-AD17-49E7-ADA1-9D66E247647C

PROJECT REFERENCE NO.	SHEET NO.
17BP.9.R.14	EC-4/CONST.-4
R/W SHEET NO.	____
ROADWAY DESIGN ENGINEER	HYDRAULICS ENGINEER
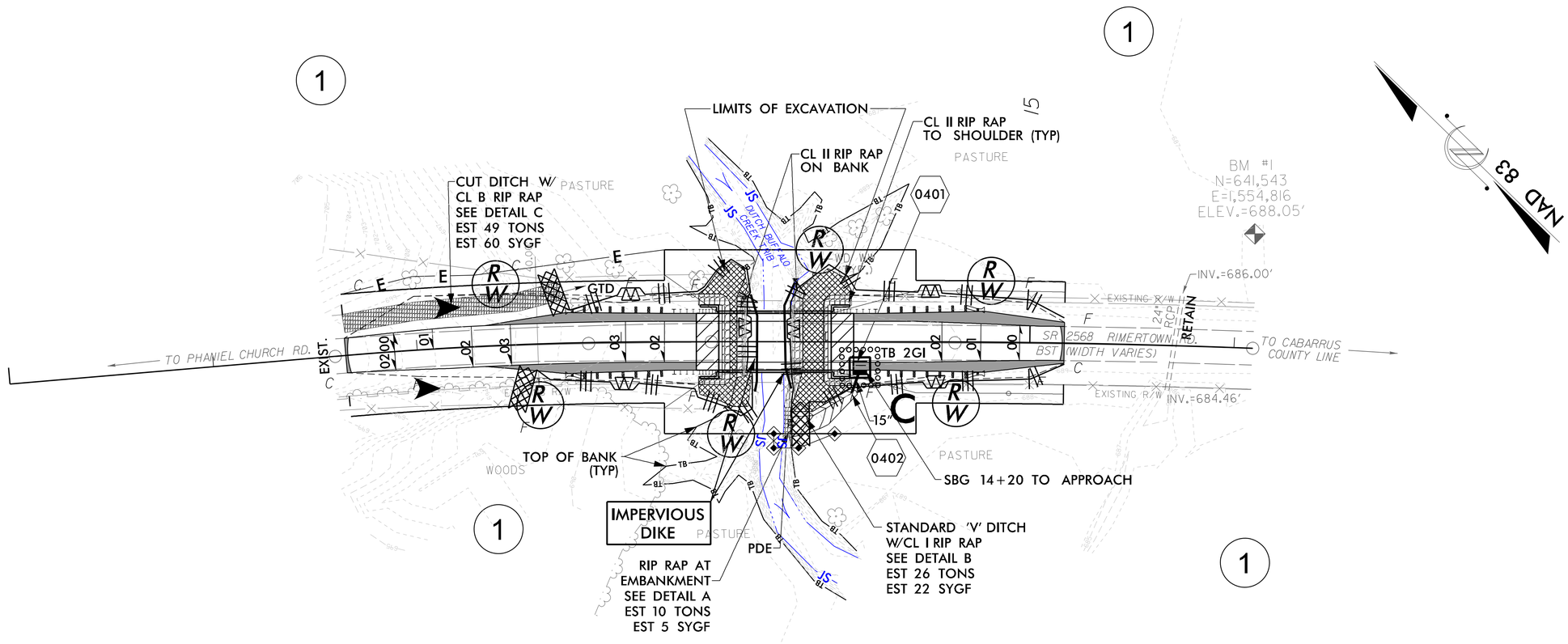
EROSION CONTROL PLAN